We help ideas meet the real world

CERTIFICATE
of
EU TYPE-APPROVAL

No. DK 0199.203

BX..

NON-AUTOMATIC WEIGHING INSTRUMENT

Issued by **DELTA Danish Electronics, Light & Acoustics**
EU - Notified Body No. 0199

In accordance with the requirements for the non-automatic weighing instrument of EC Council Directive 2009/23/EC.

Issued to **S. C. FLINTAB S.R.L.**
22 Carpenului Street
100430 Ploiesti
ROMANIA

In respect of Non-automatic weighing instrument designated **BX..** with variants of modules of load receptors, load cells and peripheral equipment.
Accuracy class III and IIII
Maximum capacity, Max: From 1 kg up to 200,000 kg
Verification scale interval: e = Max / n
Maximum number of verification scale intervals: n = 10,000 for class III, n = 1,000 for class IIII Single range. n = 2 x 6,000 for class III, n = 2 x 1,000 for class IIII Multi range (however, dependent on environment and the composition of the modules).
Variants of modules and conditions for the composition of the modules are set out in the annex.

The conformity with the essential requirements in annex 1 of the Directive is met by the application of the European Standard EN 45501: 1992.

The principal characteristics and approval conditions are set out in the descriptive annex to this certificate.

The annex comprises 31 pages.

Issued on **2009-10-16**
Valid until **2019-10-16**

Signatory: J. Hovgård

DELTA
Danish Electronics,
Light & Acoustics

Venlighedsvej 4
2970 Hørsholm
Denmark

Tel. (+45) 72 19 40 00
Fax (+45) 72 19 40 01
www.delta.dk
VAT No. DK 12275110

MEMBER OF MULTILATERAL RECOGNITION ARRANGEMENT IAF
DANAK
PROD Reg. nr 7026

Descriptive annex

Contents

		Page
1.	**Name and type of instrument and modules**	**2**
2.	**Description of the construction and function**	**3**
2.1	Construction	3
2.2	Function	4
2.3	Available options	8
3.	**Technical data**	**10**
3.1	Indicator	10
3.2	Load receptors, load cells and load receptor supports	11
3.3	Composition of modules	12
4.	**Interfaces and peripheral equipment**	**13**
4.1	Interfaces	13
4.2	Peripheral equipment	14
5.	**Approval conditions**	**14**
5.1	The legal metrology parameter (par. 200) must be adjusted as 1	14
5.2	Peak hold, filling and discontinuous totalisation operations are not approved for NAWI	14
5.3	Alibi memory of BX 6 must be activated for NAWI	14
5.4	Analogue, binary and digital control outputs are not approved for NAWI	14
5.5	The second scale indicator connected to the BX 6 must have activated alibi memory for NAWI.	14
5.6	Digital load cell interface can not be used for other devices than Flintec RC3D digital load cell(s).	15
5.7	Retaining of tally roll records	15
5.8	Compatibility of modules	15
6.	**Special conditions for verification**	**15**
6.1	Composition of modules	15
7.	**Securing and location of seals and verification marks**	**15**
7.1	Securing and sealing	15
7.2	Verification marks	16
8.	**Location of CE mark of conformity and inscriptions**	**16**
8.1	Indicator	16
9.	**Pictures**	**18**
10.	**Composition of modules – illustrated**	**31**

1. Name and type of instrument and modules

The weighing instrument is designated BX which is a system of modules consisting of an electronic indicator, connected to a separate load receptor and peripheral equipment such as printers or other devices, as appropriate. The instrument is a Class III or IIII, self-indicating weighing instrument with single-interval or multi-range. Basic scale commands like zero setting and tare may be executed via the keypad or, if any, via option boards. Additionally, entries of preset tare values and identification data are possible according to the variant of BX. The weight indicating instrument is available in various variants as follows:

BX 1T	Basic weighing indicator,
BX 1	High resolution and fast response version of BX 1T,
BX 2T	Weighing indicator with numeric keys,
BX 2	High resolution and fast response version of BX 2T, BX 2 has also weighing of unstable samples, tolerance control, basic filling and peak hold, container emptying applications besides basic weighing.
BX 3	Weighing indicator with filling application software for fast and accurate filling and discontinuous totalizing (only single interval),
BX 5	Weighing indicator with application software for truck weighing.
BX 6	Weighing terminal.

BX indicators are named as BX ND (N is a variant number) if the load cell input is for digital load cells. All variants of BX can be equipped with digital load cell input and named as BX ND, for example BX 1TD or BX 6D etc.

The indicators consist of analogue to digital conversion circuitry (except BX ND), digital load cell circuitry (in BX ND), microprocessor control circuitry, power supply, keyboard, non-volatile memory for storage of calibration and weight data, option boards and a weight display contained within a single enclosure. The metrological hardware and metrological software structures of these variants are the same; but application software, front panels and keypads are different.

BX 1T, BX 1, BX 2T, BX 2, BX 3 and BX 5 indicators can be supplied either in desk type enclosure, wall type enclosure, stainless steel enclosure or panel type enclosure. The power supply of these five indicators can be 230 VAC 50 or 60 Hz or 12 VDC or 24 VDC.

BX 6 terminal can be supplied only in the desk type enclosure and 230 VAC, 50 or 60 Hz.

BX 6 type has standard PC board inside of the enclosure and monitor and keyboard outside of the enclosure. This PC addition of BX 6 is not subject to legal control.

The modules appear from the sections 3.1, 3.2.1 and 3.2.2; the principle of the composition of the modules is set out in the sections 6.1 and 10.

2. Description of the construction and function

2.1 Construction

2.1.1 Indicator

The indicator is specified in section 3.1.

Different versions may be found in the following.

Enclosures

The indicators BX 1, BX 1T, BX 2, BX 2T, BX 3 and BX 5 can be supplied as aluminium cast desk type / wall type, stainless steel or panel mount enclosures. Panel type enclosure consists of stainless steel and aluminium.

BX 6 is supplied only in desk type housing the front panel and top cover of which are stainless steel, and bottom and rear panel chromised steel or stainless steel. Enclosures can be seen in figures 1, 2, 3, 4 and 5.

The display and keypad are located in front of indicators. There are connectors of load cell, power and peripherals etc. at the rear side of the desk / wall type and panel type enclosures. These connectors are located in the enclosure of the stainless steel instruments and cable inlets are done via cable glands.

Different versions may be found in the following.

Display and keyboard

The front panel is also available for each variant for convenient display and keyboard functions:

BX 1 and BX 1T:

A LED display of 6 digits, 7 segments, 14 mm or 20 mm high, with 10 LED annunciators to indicate unit (g, kg, lb or t), centre of zero, weighing ranges, no motion, net, gross, info, key lock and power supply information. The keyboard has 8 keys and optional power on key. Panel types may have additionally 6 annunciator LEDs for indicating the status of parallel I/Os. Display and keyboard of BX 1 can be seen in figure 1.

BX 2 and BX 2T:

A LED display of 6 digits, 7 segments, 14 mm or 20 mm high, with 9 LED annunciators to indicate unit (g, kg, lb or t), centre of zero, weighing ranges, no motion, net, gross, preset tare and power supply information. On the left of the display, there are also 6 information LEDs which are used for information like inputs, outputs, start etc. depending on the application software of the indicator. The keyboard has 18 keys and optional power-on key. Display and keyboard of BX 2 can be seen in figure 2.

BX 3:

A LED display of 6 digits, 7 segments, 14 mm or 20 mm high, with 9 LED annunciators to indicate unit (g, kg, lb or t), centre of zero, key lock, mode, no motion, net, gross, gross/net functioning and power supply information . On the left of the display, there are also 6 information LEDs which are used for information like inputs, outputs, start etc. depending on the application software of the indicator. The keyboard has 18 keys and optional power-on key. Display and keyboard of BX 3 can be seen in figure 3.

BX 5:

A LED display of 6 digits, 7 segments, 14 mm or 20 mm high, with 9 LED annunciators to indicate unit (always kg or lb), centre of zero, weighing ranges, preset tare, no motion, gross, info and power supply information . On the left of the display, there are also 6 information LEDs which are used for ready, inbound, outbound, pt.vehic, transit and key lock by the application software of the indicator. The keyboard has 18 keys and optional power-on key. Display and keyboard of BX 5 can be seen in figure 4.

BX 6:

A LED weight display of 6 digits, 7 segments, 20 mm high, with 9 LED annunciators to indicate unit (g, kg, lb or t), centre of zero, weighing ranges, no motion, net, gross, key lock and power supply information. BX 6 is weighing terminal which can be connected to the standard PC keyboard and PC monitor. The keyboard has 6 keys. Display and keyboard of BX 6 can be seen in figure 5.

Electronics

The metrological circuitry for the variants of weight indicator is identical. The instrument can be equipped with option boards. The indicator BX includes the main modules which are display board, main board, PC board(s) (only in BX 6), switching power supply unit (only in BX 6), digital load cell board (in BX ND), alibi board (optional except for BX 6).

The weight indicating instruments use a 89C668 or 89C669 microcontroller, serial EEPROM and alibi memory (standard in BX6, others optional). If any, analogue load cell signal processing circuit is enclosed in an EMC shielding box. All instrument calibration and metrological setup data is contained in nonvolatile memory. The required voltages are supplied by the circuitry located on the boards and switching power supply (only in BX6).

2.1.2 Load receptors, load cells and load receptor supports

Set out in section 3.2.

2.1.3 Interfaces and peripheral equipment

Set out in section 4.

2.2 Function

The weight indicating instruments are microcontroller based electronic weight indicators that require the external connection of strain gauge based analogue load cells or digital load cells. The weight information appears in the digital display located on the front of the instrument and may be transmitted to peripheral equipment for recording, processing or display. There are available data output options such as binary data output, analogue output, Modbus, Ethernet etc. The instruments are available for operation from mains 230 VAC 50 or 60 Hz or from a 12 VDC (except for BX6) or from a 24 VDC (except for BX6).

The primary functions provided are detailed below. The key functions can be provided via opto-isolated inputs, serial interfaces, Modbus RTU, profibus, profinet, Canbus/Canopen and/or Ethernet.

2.2.1 Power-up

For legal metrological applications, on power-up, the indicator performs an automatic self test and verification of all data storage components to ensure correctness of instruction, calibration and data memory.

During the self test, the following are displayed in sequence:

Installed options and variant name together with software version number for 10 seconds (SW ver. 01.XX) respectively 20 seconds (SW ver. 02.XX and 03.XX). All digits and later annunciations are illuminated for a short period of time and all digits counting up for a period of time.

In case of error, appropriate error messages are given.

After the test, the indicator will proceed with initial zero setting, if this function is activated. The message [E E E] will remain in the display until pressing enter key for values out of initial zeroing range; but power on zero device does not perform its function in this case.

2.2.2 Test function

On power-up, the indicator will test all memory functions and cause all display elements to illuminate so that a visual verification of their operation can be made.

In case of error, appropriate error messages are given.

2.2.3 Display range

The indicator displays from -2% of Max to Max + 9e1.

Under this range, the message “under” appears on the display.

Over this displaying range, the message “over” appears on the display.

If the input signal is out of the instrument input conversion range the message “ADC OUT” appears.

2.2.4 Zero-setting

Zero-setting can only take place when the weight display is stable.

Pressing the ZERO key causes a new zero reference to be established and the ZERO annunciator to be illuminated at the centre of zero.

Zero-setting range can be limited up to 4% of Max. and initial zero setting range can be limited up to 20 % of Max from the time of calibration for NAWI.

2.2.5 Zero-tracking

The indicators are equipped with a zero-tracking feature which operates over a range of 4% of Max and only when the indicator is at gross zero and there is no motion in the weight display.

2.2.6 Units

The family may be produced any unit accepted in EU as kg, g, t, lb etc. For force measurement applications, the indicator will be accepted as a force measuring instrument and the unit may be force unit like Newton.

2.2.7 Tare

The instrument models - except BX 5 - are provided with a subtractive tare, while only Model BX 2 and BX5 have a preset tare feature. The maximum tare capacity corresponds to the maximum indication of the scale.

2.2.7.1 Semi-automatic tare

The condition for a taring is the equilibrium of the scale and positive indication. The status tared is marked by the symbol “Net” on the display. Repeated pressing causes the tare to be cleared and new tare entered in its place.

2.2.7.2 Preset (numeric) tare

The BX 2 and BX 2T indicators may be equipped with a preset tare device. When the preset tare is operative, no other tare device is active. On BX 2 the net and preset tare annunciators will be illuminated. On BX5 the Gross and preset tare annunciators will be illuminated, as BX 5 always shows gross weight.

2.2.7.3 Preset tare memory

The BX 2, BX 2T and BX 5 indicators may be equipped with a preset tare memory. Up to 99 preset values associated with a unique identification code can be stored in the indicator. These values are entered via the keypad with their code.

2.2.7.4 Auto clear tare device

The indicator can be equipped with an auto clear tare device. The condition for an auto clear taring is taking off the load from the load receptor.

2.2.8 Gross/Net indication

If the instrument has Gross/Net key on it, the weight display can be switched from net indication to gross indication for five seconds by pressing the Gross/Net key.

2.2.9 Increased display resolution

The weight indicator is equipped with increased resolution which operates after pressing the related key and functioning shorter than 5 seconds. It is not possible to get printout in increased resolution.

2.2.10 Tilt switch device

The indicator can be equipped with tilt switch device. If the tilt limit is excided the text “ tilt” is displayed instead of the weight value.

2.2.11 Weighing unstable samples device

The indicator BX 2 can be equipped with weighing unstable samples device. This device has special long time filtering feature (from 5 seconds up to 9.9 seconds) for measuring the weights of unstable samples.

2.2.12 Tolerance control device

The indicator BX 2 can be equipped with tolerance control device. This device has special display annunciator LED and digital output functions for operator.

2.2.13 Printing

The instrument can be connected to serial or parallel (only BX 6) printers with the proper interface. It can be programmed to print date and time of weighing, consecutive number of printing, codes, and name of the company or any other message that may be required together with weight results. Printing

is not possible when the indicator is not stable or the gross value is not positive. In legal metrological usage, alibi record number is also printed. For totalisation application of BX 2 which is a sequential weighing, only the last weighing alibi record number is printed.

2.2.14 Print interlock device

The indicator BX can be equipped with print interlock device. The condition for reprint with this device is that the weight must be unstable once.

2.2.15 Fully automatic print

A fully automatic print device of BX may be switched on or off during the setup, for use in weighing process as a print if the weight is over the value of set point 1. All of the printing conditions are also valid for automatic print. This device can be used for printing according to application software.

2.2.16 Real time clock

If it is available in the instrument, the real time clock can be activated to get print out with day and time information.

2.2.17 Printing header and footer

It is possible to add freely programmable header and footer to the printout data. If any, the required header and footer data can be loaded via serial port in host mode.

2.2.18 Totalisation

The totalisation functions of BX 2, i.e. total indication on the printout of the instrument, can be switched on.

2.2.19 Inbound / Outbound weighing (BX 5 only)

BX 5 can - based on the truck ID - combine an inbound weighing of a truck with the outbound weighing of the same truck taking the smallest weight as a tare value and the other as a gross weight.
The Net value will not be shown in the display, but will be printed on the weighing ticket.

2.2.20 Gravity acceleration

The gravity acceleration adjustment parameter can be used to compensate the weight difference between the place in which the instrument is calibrated and the place of usage. There is one parameter for this adjustment. The value entered in this parameter before calibration is considered as a reference gravity value. After calibration, the value in the parameter is seen as 0. For gravity adjustment, the new value must be entered into this parameter after calibration. After entering the new value, the calibration is automatically adjusted for the place of usage.

2.2.21 Adjusting device

Regarding the connection of the scale, the metrologically relevant adjustment is filed in the memory of the evaluation electronics. The access to this adjusting mode or a change of these metrological adjustments is only possible after the short circuit of the calibration jumper.

2.2.22 Operator information messages

The weight indicator has a number of general and diagnostic messages which are described in detail in the manuals.

2.2.23 Software version

The software revision level is displayed during the power-up sequence of the instrument.
The format of the software revision number is YY.XX, where YY is the revision number of the legally relevant functionality of the software and XX is the sub-revision number for software changes not related to the legal functionality of the software.
The approved software versions are 01.XX, 02.XX and 03.XX. BX 5 shall have version 03.XX.

2.3 Available options

2.3.1 Digital 3 inputs / 3 outputs

If the instrument has digital inputs and is connected to external devices, the inputs can be used for controlling purposes. The functioning of inputs are convenient to the application of the variant.

If the instrument has digital outputs and is connected to external devices, the outputs can be programmed to control them depending on weight values. The functioning of outputs are convenient to the purpose of the variant.

2.3.2 Digital 4 inputs / 8 outputs

If the instrument has digital 4 inputs and 8 outputs for connecting to external devices, the functioning of these inputs and outputs are convenient to the application of the variant.

2.3.3 Analogue output

The optional analogue output board installed the indicator BX 2 gives an analogue output proportional to the displayed weight in the range of 4-20 mA and 0-10 V. This output cannot be used for legal metrological purposes.

2.3.4 Binary output

With the optional board installed, the indicator BX 2 gives a binary coded digital output proportional to the displayed weight. This output cannot be used for legal metrological purposes.

2.3.5 Serial interface

With the optional board installed, the indicator BX can be equipped with up to two additional serial interfaces. The interfacing details can be found in the manuals.

2.3.6 Ethernet

With the optional Ethernet board installed, the indicator BX interfaces also via Ethernet port. All serial data output facilities are available with Ethernet output.

2.3.7 Modbus RTU

With the optional board installed, the indicator BX interfaces via MODBUS RTU for process applications via Ethernet output or RS422/485 output.

2.3.8 Profibus

Profibus option hardware can be installed in the indicator for process applications.

2.3.9 Profinet

Profinet option hardware can be installed in the indicator for process applications.

2.3.10 Canbus / Canopen

Canbus / Canopen option hardware can be installed in the indicator for process applications.

2.3.11 Battery

230 VAC instruments can be equipped with rechargeable battery.

2.3.12 Alibi memory

The indicator BX may be equipped with an alibi memory. This one allows the storage of up to 149764 data. According to various searching criteria, the weight values may be read out. The storage is made automatically after activating the transfer key or after the corresponding calling of data via the data-interface.

If the alibi memory is enabled by parameter 801, the indicator BX stores weight transactions transmitted to a non-approved peripheral instead of printing the weight. The alibi memory is internal of the instrument and it is not possible intentionally or unintentionally to change the alibi memory without short circuit of calibration jumper. Data transfer is also prevented for inconvenient alibi memory cases. For each transaction, the gross weight, tare weight, preset tare status and check sum are stored in the memory. The stored data can be seen from display or printed. Empty records are printed as “ ------- “ . If there is an error on the record, “ xxxxxx” is printed.

If the alibi memory is activated, the alibi record number is also found on the printout data.

After installing the alibi board or changing main board, Error 41 or 42 will seen on the display after power-on for activating alibi memory. If the calibration jumper is short-circuited, you can activate the alibi board by pressing enter key after power-on. Otherwise, the display of alibi errors will disappear by pressing enter key, but no data will be output from BX 2 (Error 43 will be seen after pressing print key).

Parameter 802 is used to reach any record and parameter 803 is used to print all records. The usage of these parameters can be found in the each variant manual.

By parameter 804, you can print the information data about alibi card. These data are alibi card pin code, the start alibi record number within this indicator, the next alibi record number to be used, calibration counter number, checksum status, and alibi memory record capacity.

3. Technical data

The Model BX.. weighing instruments are composed of separate modules, which are set out as follows:

3.1 Indicator

The indicator has the following characteristics:

Type:	BX..
Accuracy class:	III and IIII
Weighing range:	Single interval and multi range
Maximum number of Verification Scale intervals:	10,000 (class III), 1,000 (class IIII) for single interval 2 x 6,000 (class III), 2 x 1,000 (class IIII) for multi range
Maximum subtractive tare effect:	-Max, within display limits

For indicators with analogue load cell(s):

Fractional factor:	p'i = 0.5
Minimum input voltage per VSI:	0.5 µV for software version 01.XX, and 0.4 µV for software version 02.XX.
Minimum input voltage:	0 mV
Maximum input voltage:	20 mV
Excitation voltage:	5 VDC
Analogue range:	0 to 40 mV
Circuit for remote sense:	Active
Minimum input impedance:	58 ohm
Maximum input impedance:	1,200 ohm
Internal resolution:	Up to 8,000,000 counts

For indicators with digital load cell(s):

Fractional factor:	p'i = 0.0
Load cell interface	through RS485 serial interface
Power supply	9 - 12 VDC, max 450mA internal External power supply for I > 450 mA
Operating temperature range:	-10° C to +40° C, up to 85% humidity noncondensing
Mains power supply:	230 VAC, 50 Hz / 60 Hz or 12 VDC or 24 VDC
Peripheral interface:	Set out in section 4

3.1.1 Connecting cable between the indicator and a junction box for load cell(s), if any

For analogue load cells;

Cable between indicator and load cell(s): 6 wires (sense), shielded.

Maximum cable length between indicator and junction box (J-box) for load cell(s), if any:

- Option 1: 274 m/mm²

In case the (n) for the weighing instrument is less than (n) mentioned above, the following apply:

- Option 2:

Coefficient of temperature of the span error of the indicator: Es = 0.0044 [% / 25K]
Coefficient of resistance for the wires in the J-box cable: Sx = 0.0034 [% / ohm]

L/A_{max} = 295.86 / Sx * (emp / n - Es) [m / mm²] in which emp = p'i * mpe * 100 / e

From this, the maximum cable length for the weighing instrument may be calculated with regard to (n) for the actual configuration of the instrument.

Reference: See section 10.

The calculation program is obtainable by downloading at www.delta.dk/weighing.

For digital load cells;

Connection with 4 wired and shielded cable. Max length is 1,000m.

3.2 Load receptors, load cells and load receptor supports

Removable platforms shall be equipped with level indicators.

3.2.1 General acceptance of modules

Any load cell(s) may be used for instruments under this certificate of type approval provided the following conditions are met:

1) A test certificate (EN 45501) or a respective OIML Certificate of Conformity (R60) is issued for the load cell by a Notified Body responsible for type examination under the Directive 2009/23/EC.

2) The certificate contains the load cell types and the necessary load cell data required for the manufacturer's declaration of compatibility of modules (WELMEC 2, Issue 5, 2009), and any particular installation requirements). A load cell marked NH is allowed only if humidity testing to EN 45501 has been conducted on this load cell.

3) The compatibility of load cells and indicator is established by the manufacturer by means of the compatibility of modules form, contained in the above WELMEC 2 document, or the like, at the time of EC verification or declaration of EC conformity of type.

4) The load transmission must conform to one of the examples shown in the WELMEC 2.4 Guide for load cells.

3.2.2 Load cells

The load cells, which are listed below are certified as modules in the weighing instrument.

Manufacturer	Load cell type
Flintec	RC3D digital load cell

3.2.3 Weigh bridge platforms

Construction in brief	All-steel, concrete or steel-reinforced concrete construction, surface or pit mounted
Reduction ratio	1
Junction box	Mounted in, on or near the platform
Load cells	Any R60 certified load cell according to section 3.2.1
Drawings	Various

3.2.4 Platforms

Construction in brief	All-steel, aluminium, plastic, steel-reinforced concrete construction or hybrid construction of these materials, Bench, surface, pit or wall mounted.
Reduction ratio	1
Junction box	Mounted in, on or near the platform
Load cells	Any R60 certified load cell according to section 3.2.1
Drawings	Various

3.2.5 Scales with lever system

All load receptors with lever system according to article 6.3 of EN45501.

Construction in brief	“V” shape design in steel construction fitted with levers, cutters and bearings in hardened steel.
Reduction ratio	between 1:1 to 1:100
Junction box	Mounted on dead structure, in or near the platform.
Load cells	Any R60 certified load cell according to section 3.2.1

3.2.6 Bin, tank, hopper, conveyor and non-standard systems

Construction in brief	Load cell assemblies each consisting of a load cell stand assembly to support one of the mounting feet bin, tank or conveyor etc.
Reduction ratio	1
Junction box	Mounted in, on or near the dead load
Load cell	Any R60 certified load cell according to section 3.2.1
Drawings	Various

3.2.7 Crane, hoist, and other suspension type systems

Construction in brief	Load cell assembly(-ies) each consisting of a load cell depend on the system.
Reduction ratio	1
Junction box	Mounted in, on or near the dead load
Load cell	Any R60 certified load cell according to section 3.2.1
Drawings	Various

3.3 Composition of modules

In case of composition of modules, EN 45501 paragraph 3.5 and 4.12 shall be satisfied.

4. Interfaces and peripheral equipment

4.1 Interfaces

The interfaces are characterised “Protective interfaces” according to paragraph 8.4 in the Directive.

4.1.1 Load cell interface

The load cell connector for connection of analogue or digital load cells is positioned on the instrument.

4.1.2 Serial interface

Indicator can be equipped with up to three type serial bidirectional interfaces. These interfaces can be RS 232, RS422/RS 485 and/or 20 mA CL ASCII. They are configurable as continuous, demand mode in ASCII or EPL, host mode, Modbus RTU according to the hardware, software options (if any) and the variant. Digital load cell interface (digital load cell connector) cannot be used as serial interface for other devices. Key functions can be performed via serial interfaces.

4.1.3 Parallel interface

The indicator BX 6 has parallel port for printer connection. Other BX variants does not have parallel interface.

4.1.4 Printer interface

If any, serial interface, Ethernet and parallel interface outputs can be used for printer connection.

4.1.5 Digital I/O interface

If the instrument has digital I/O board(s) and connected to external devices, the I/Os can be programmed to control them depending on weight values. The functioning of I/Os is convenient to the purpose of the variant. Key functions can be performed via inputs.

4.1.6 Analogue output interface

With the analogue output board installed, the indicator gives an analogue output proportional to the displayed weight in the range of 4-20 mA or 0-10 V. Zeroing can be performed via opto isolated input.

4.1.7 Binary output interface

With the binary output installed, the indicator BX gives a binary coded digital output proportional to the displayed weight. Zeroing can be performed via opto-isolated input.

4.1.8 Host interface

RS232, RS422/RS 485, 20 mA CL ASCII and Ethernet outputs can be used for host interface of the instrument. Parameters and ID, printout header-footer etc. can be uploaded and/or downloaded via host interface. Calibration is also performed via host. Key functions can be performed via host interface. All legal metrological restrictions are valid for host communication.

4.1.9 Ethernet interface

The Ethernet interface can be used for all available data output facilities of the instrument.
Key functions can be performed via Ethernet interface.

4.1.10 Second scale interface

Optionally, the indicator BX 6 can be connected to the second scale via serial port. The second scale indicator must have an activated alibi memory.

4.1.11 Profibus

Optionally, the indicator can be connected to the process controllers via profibus interface. The key functions can be performed via profibus interface.

4.1.12 Profinet

Optionally, the indicator can be connected to the process controllers via profinet interface. The key functions can be performed via profinet interface.

4.1.13 Canbus / Canopen

Optionally, the indicator can be connected to the process controllers via Canbus / Canopen interface. The key functions can be performed via profinet interface.

4.2 Peripheral equipment

Connection between the indicator and peripheral equipment is allowed by screened cable.

The instrument may be connected to any simple peripheral device with a CE mark of conformity.

5. Approval conditions

5.1 The legal metrology parameter (par. 200) must be adjusted as 1

The parameter 200 of the instrument must be adjusted as 1 for usage of the instrument in approved applications.

5.2 Peak hold, filling and discontinuous totalisation operations are not approved for NAWI

Peak hold, filling and discontinuous totalisation operation modes of the instrument BX in such a way that the instrument becomes an automatic weighing instrument is not covered by NAWI applications. However, if the parameters are adjusted according to NAWI, these modes can be verified for NAWI applications.

5.3 Alibi memory of BX 6 must be activated for NAWI

The BX 6 terminal can only be used for NAWI if it has alibi memory board and if the related alibi memory parameter is activated.

5.4 Analogue, binary and digital control outputs are not approved for NAWI

The optional analogue, binary and parallel I/O board outputs are not covered by NAWI approval.

5.5 The second scale indicator connected to the BX 6 must have activated alibi memory for NAWI.

If BX 6 application needs two scales, the remote scale must have alibi memory. This alibi must be activated for NAWI.

5.6 Digital load cell interface can not be used for other devices than Flintec RC3D digital load cell(s).

The digital load cell interface (load cell connector) can only be used for Flintec RC3D digital load cell(s) interfacing. This interface cannot be connected to the other devices in legal metrological usage.

5.7 Retaining of tally roll records

Conditions for retaining of tally roll records as documentation for legal transactions carried out using non-verified peripheral equipment are not covered by this type approval, as no common rule is adopted by the member states as yet. It is up to the national authority to decide on these conditions until a common rule is adopted.

5.8 Compatibility of modules

In case of composition of modules, WELMEC 2 (Issue 5) 2009, paragraph 11 shall be satisfied.

6. Special conditions for verification

6.1 Composition of modules

The environmental conditions should be taken into consideration by the composition of modules for a complete weighing instrument, for example instruments with load receptors placed outdoors and having no special protection against the weather.

The composition of modules shall agree with section 5.3.

An example of a declaration of conformity document is shown in section 10.

7. Securing and location of seals and verification marks

7.1 Securing and sealing

Seals shall bear the verification mark of a notified body or alternative mark of the manufacturer according to ANNEX II, section 2.3 of the Directive 2009/23/EC.

7.1.1 Indicator

Access to the calibration and changing legal metrologically relevant configuration parameters are achieved by the calibration jumper located on the main board. Sealing of this jumper can be done by sticker or lead wire seal.

If any, analogue load cell connector located on the main board must be sealed by sticker or lead wire seal.

Sealing of the connection to the digital load cell(s) is not required, as the indicator checks the serial number(s) of the digital load cell(s) at power-up and the serial numbers are protected by the calibration switch.

Sealing of the alibi card is not necessary as it is identified by a pin code, which is protected by the calibration jumper.

Figure 6 to figure 12 indicate the sealing of BX indicator variants.

Data plate must be sealed by sticker as indicated in the sealing drawings if self destroyed label is not used.

7.1.2 Indicator - load cell connector - load receptor

Securing of the indicator, load receptor and load cell combined is done in one of the following ways:

- Sealing of the load cell connector with the indicator by a lead wire seal or brittle plastic stickers (as seen on the instrument's rear views in figure 6 to figure 9 , figure 11 and figure 12 for sealing; and as seen in the stainless steel housing in figure 10 for sealing).
- Inserting the serial number of the load receptor as part of the principal inscriptions contained on the indicator identification label.
- The load receptor bears the serial number of the indicator on its data plate.
- Serial numbers of the load receptor and the indicator are the same.

7.1.3 Junction box for load cells

Access to the junction box for analogue load cells, if any, is prevented by the use of lead wire seals or by sealing it with brittle plastic stickers.

Securing of the junction box of RC3 digital load cell connection is not required, as the indicator checks the serial number of the digital load cell(s) at power-up and the serial numbers are protected by the calibration switch.

7.1.4 Peripheral interfaces

All peripheral interfaces are "protective". When the calibration jumper is sealed, they neither allow manipulation with weighing data or legal setup, nor change of the performance of the weighing instrument in any way that would alter the legality of the weighing.

7.2 Verification marks

7.2.1 Indicator

A green M-sticker and verification marks may be placed on the front or on the data plate of the indicator.

7.2.2 Printers used for legal transactions

Printers covered by this type approval and other printers according to section 4.2 shall bear a green M-sticker, if they are used for legal transactions.

7.2.3 Non-verified peripheral equipment

If such equipment is connected to the weighing instrument, it shall bear a red M-sticker.

8. Location of CE mark of conformity and inscriptions

8.1 Indicator

8.1.1 CE mark

A CE mark of conformity is located on the identification plate which is located on the back or the side of the enclosure and/or on the front layout of the indicator.

8.1.2 Inscriptions

Manufacturer’s trademark and/or name, the type designation name, certificate no, accuracy class, serial no, min, max and e is located on the identification plate together with CE mark as seen in figure 13.

Max, Min and e are located on the front panel overlay.

Electrical data and other inscriptions can be found on the instrument.

8.1.2.1 Load receptors

On a data plate:

- Manufacturer's name, type, serial number, capacity.

Left to the manufacturer’s choice as provided in section 7.1.2:

- Serial no. of the indicator.

9. Pictures

BX 1, BX 1T Desk Type

BX 1, BX 1T Wall Type 1

BX 1, BX 1T Wall Type 2

BX 1, BX 1T with stand mount kit

BX 1, BX 1T Stainless steel housing

BX 1, BX 1T Panel Type

Figure 1. BX 1, BX 1T Indicator enclosures

BX 2, BX 2T Desk Type

BX 2, BX 2T Wall Type 1

BX 2, BX 2T Wall Type 2

BX 2, BX 2T with stand mount kit

BX 2, BX 2T Stainless steel housing

BX 2, BX 2T Panel Type

Figure 2. BX 2, BX 2T Indicator enclosures

BX 3 Desk Type

BX 3 Wall Type 1

BX 3 Wall Type 2

BX 3 with stand mount kit

BX 3 Stainless steel housing

BX 3 Panel Type

Figure 3. BX 3 Indicator enclosures

BX 5 Desk Type

BX 5 Wall Type 1

BX 5 Wall Type 2

BX 5 with stand mount kit

BX 5 Stainless steel housing

BX 5 Panel Type

Figure 4. BX 5 Indicator enclosures

Figure 5. BX 6 Indicator enclosure

FLINTAB

This branding label is to be placed on the front of the indicator used

Figure 6. Branding label on the front of the indicator

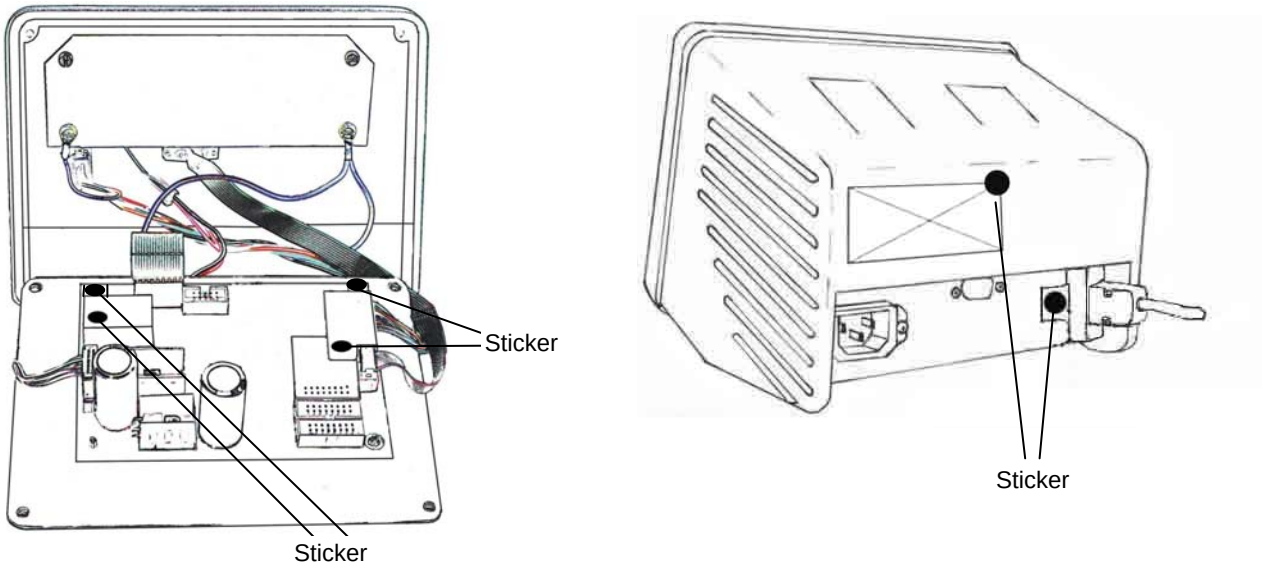

Sealing details with sticker

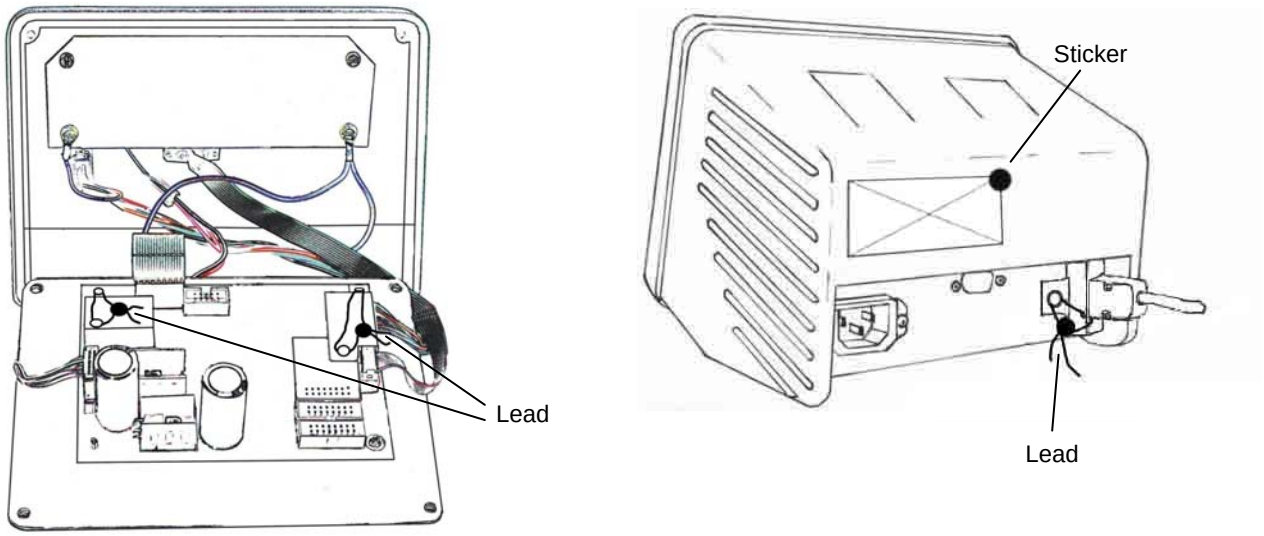

Sealing details with lead

Figure 7. BX 1, BX 1T, BX 2, BX 2T, BX 3, BX 5 aluminum housing sealing details

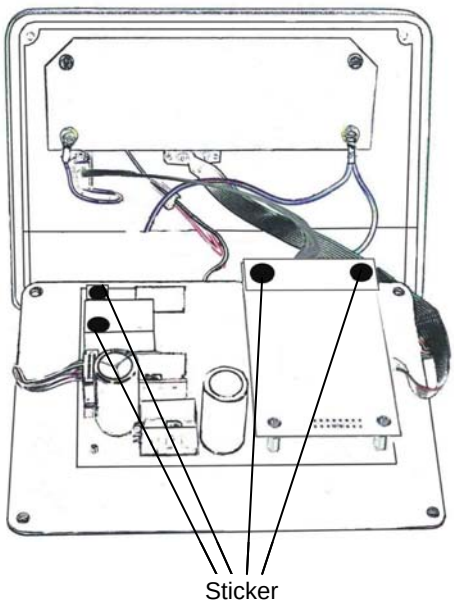

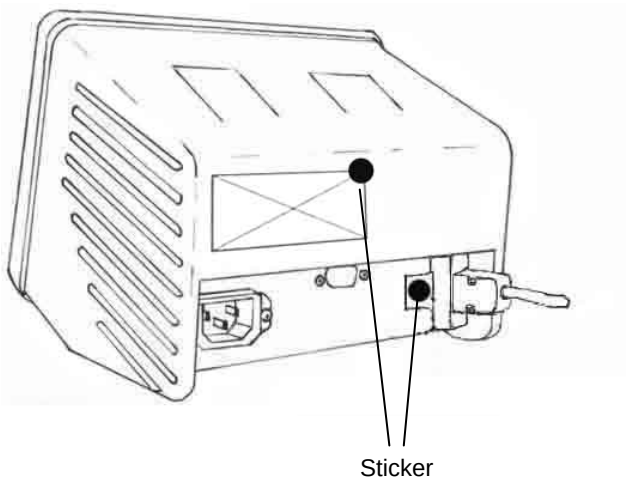

Sealing details with sticker

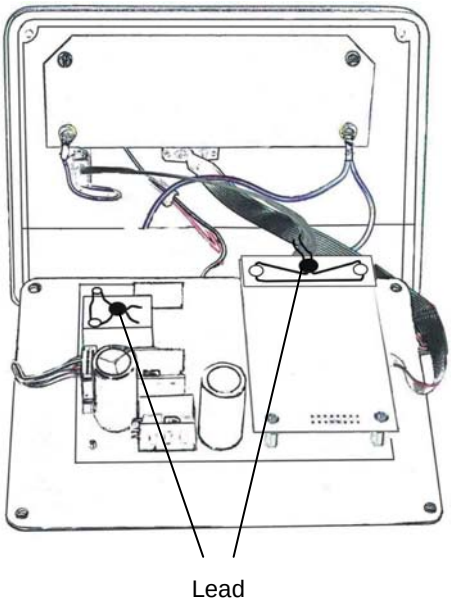

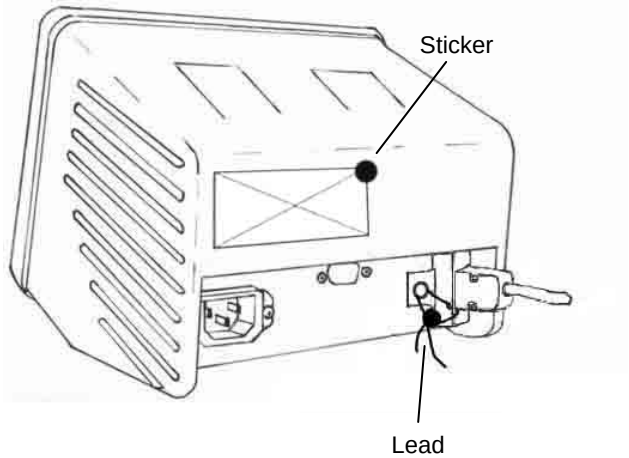

Sealing details with lead

Figure 8. BX 1D, BX 1TD, BX 2D, BX 2TD, BX 3D, BX 5D aluminum housing sealing details

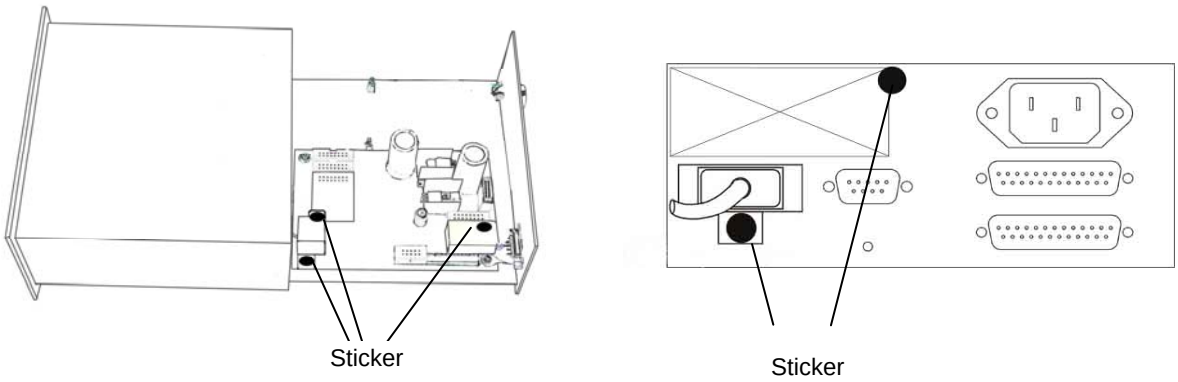

Sealing details with sticker

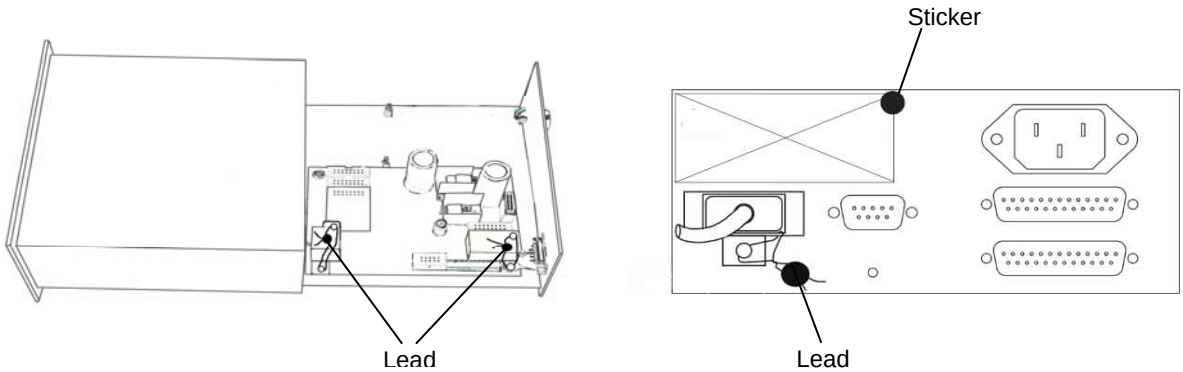

Sealing details with lead

Figure 9. BX 1, BX 1T, BX 2, BX 2T, BX 3, BX 5 panel type sealing details

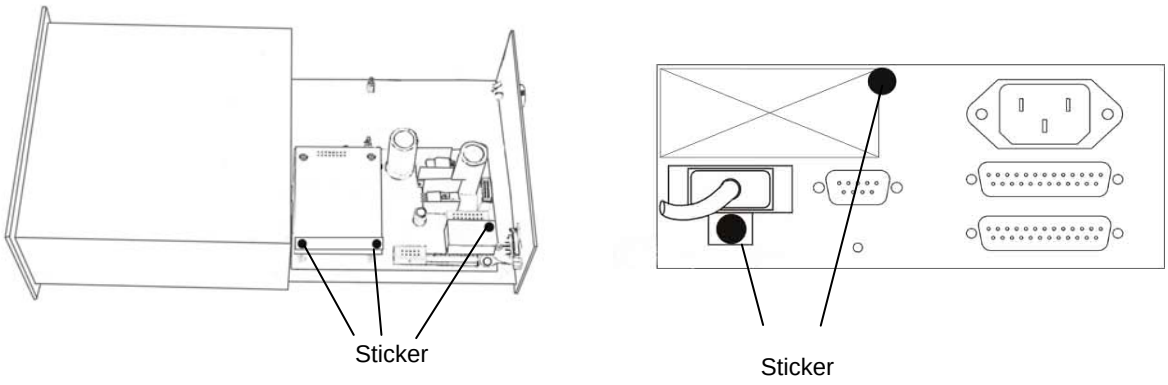

Sealing details with sticker

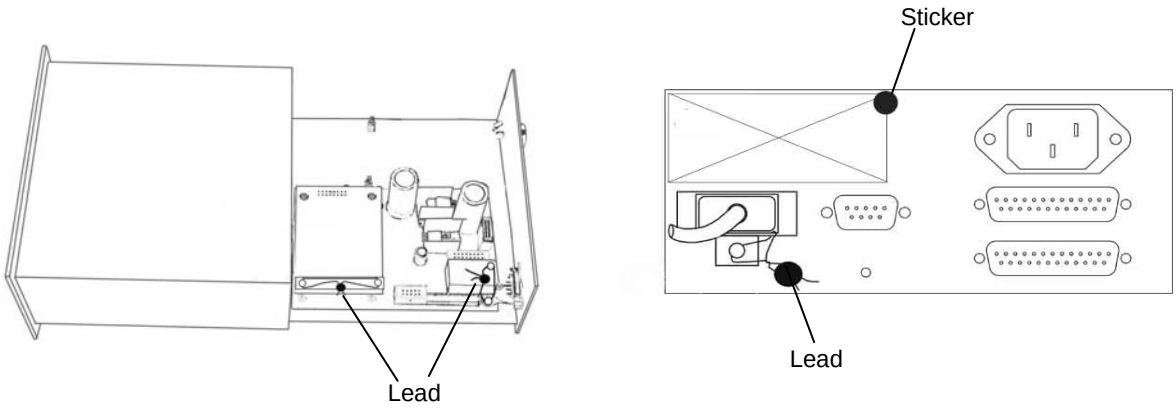

Sealing details with lead

Figure 10. BX 1D, BX 1TD, BX 2D, BX 2TD, BX 3D, BX 5D panel type sealing details

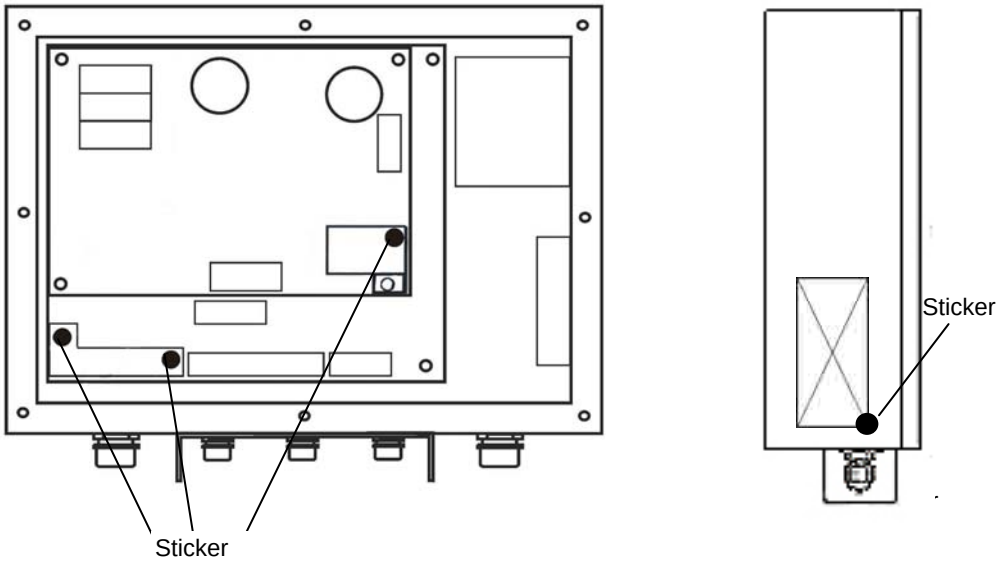

Sealing details with sticker

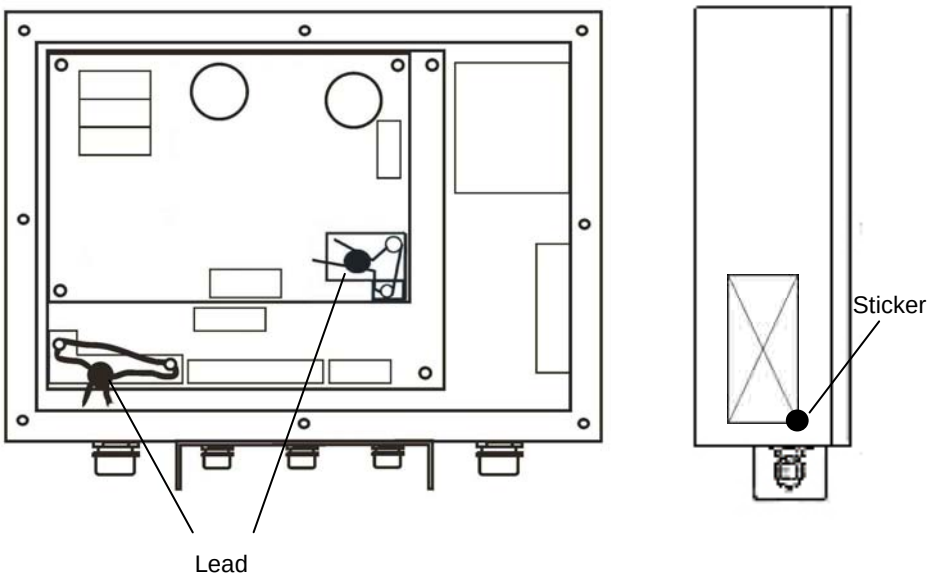

Sealing details with lead

Figure 11. BX 1, BX 1T, BX 2, BX 2T, BX 3, BX 5, BX 1D, BX 1TD, BX 2D, BX 2TD, BX 3D, BX 5D stainless steel housing sealing details

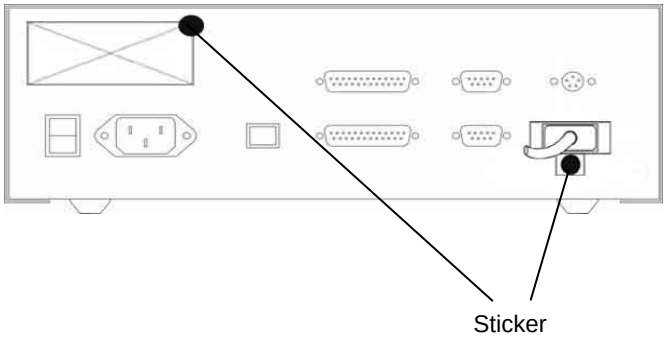

Sealing details with sticker

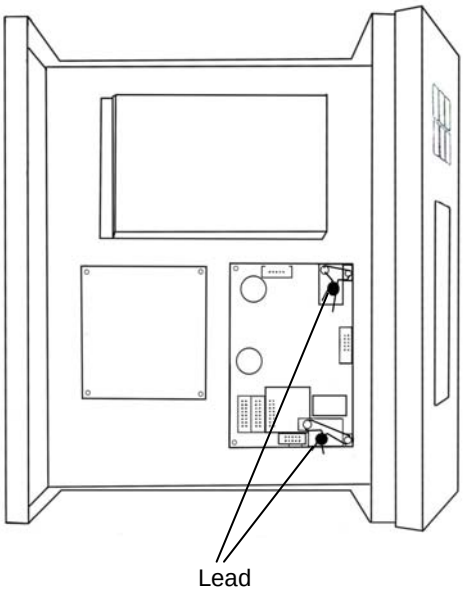

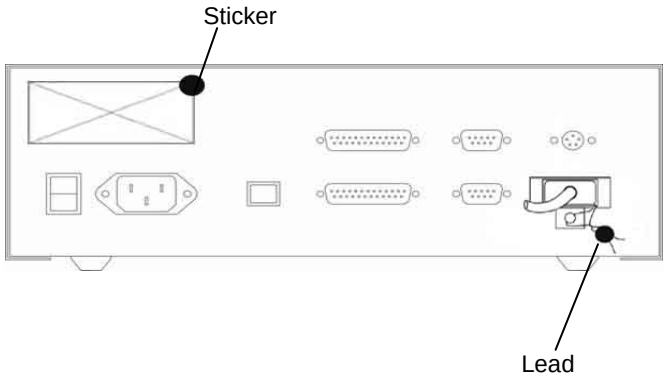

Sealing details with lead

Figure 12. BX 6 sealing details

(The placement of the connectors – as well as their presence - may vary)

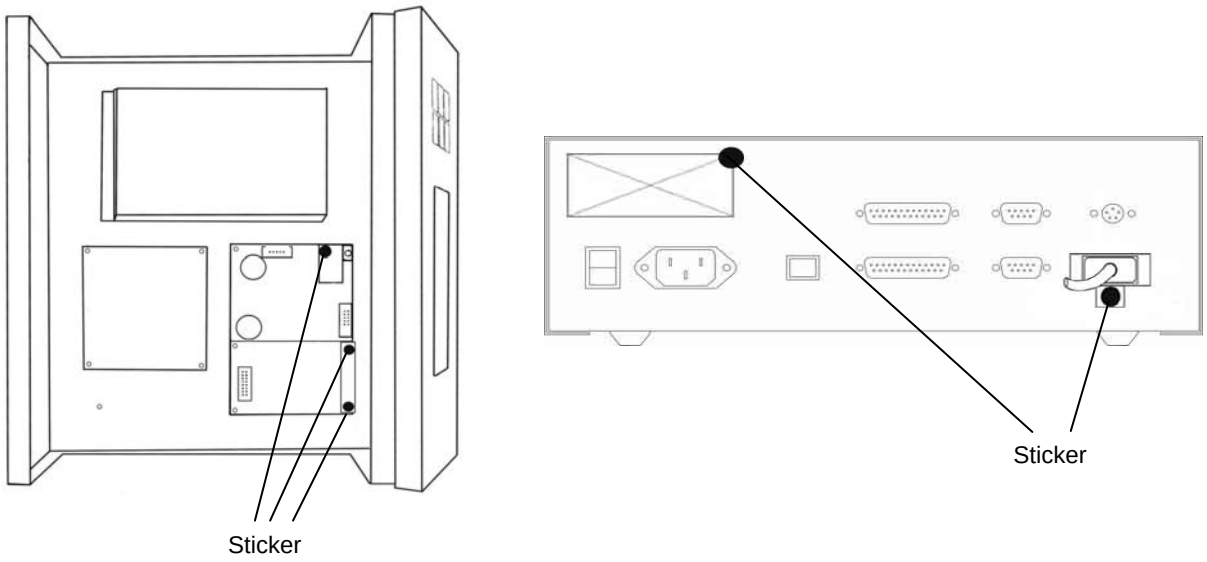

Sealing details with sticker

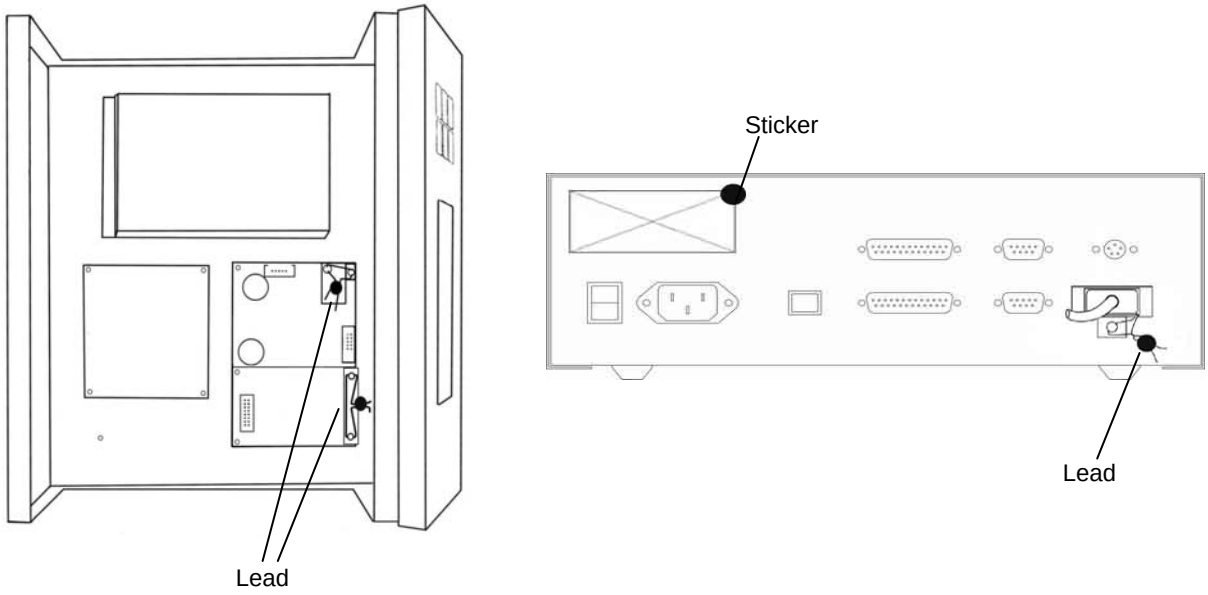

Sealing details with lead

Figure 13. BX 6D sealing details

(The placement of the connectors – as well as their presence - may vary)

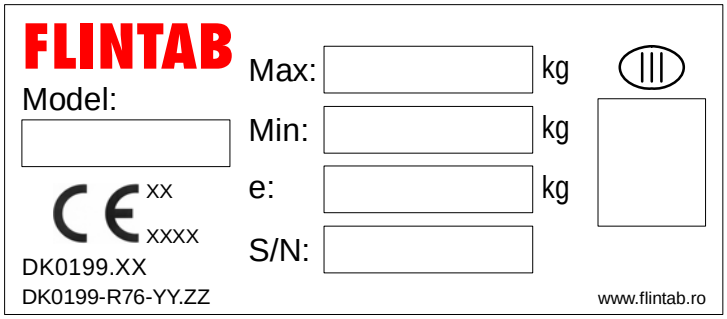

Data plate for single range

Marking near display for single interval

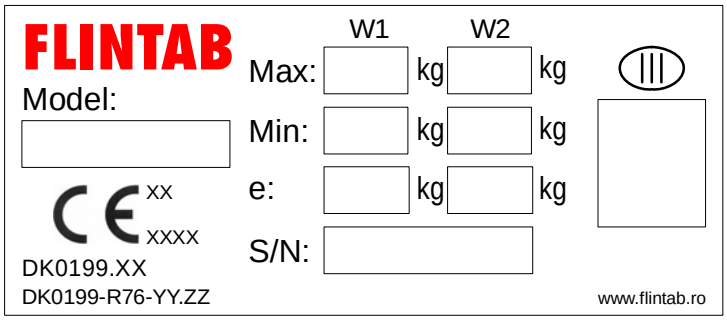

Data plate for multiple range

Marking near display for multi-range

Figure 14. BX.. Marking

10. Composition of modules – illustrated

COMPATIBILITY OF MODULES

Ref.: WELMEC 2

Non-Automatic Weighing Instrument, multi-range

Certificate of EU Type-Approval N°: TAC: DK0199.203

INDICATOR A/D (Module 1)	Type:	BX2			
Accuracy class according to EN 45501 and OIML R76:	$Class_{ind}$	(I, II, III or IIII)		III	
Maximum number of verification scale intervals (r_{max} or lower):	n_{ind}			10000	
Fraction of maximum permissible error (mpe):	p_1			0,5	
Load cell excitation voltage:	U_{exc}	[Vdc]		5	
Minimum input-voltage per verification scale interval:	Δu_{min}	[µV]		0,4	
Minimum load cell impedance:	R_{Lmin}	[Ω]		58	
Coefficient of temperature of the span error:	Es	[% / 25°C]			0,0044
Coefficient of resistance for the wires in the J-box cable	Sx	[% / Ω]			0,0034
Specific J-box cable-Length to the junction box for load cells	$(L/A)_{max}$	[m / mm²]			270
Load cell interface:		6-wire (remote sense)			
Additive tare, if available:	T^+	[% of Max]		0	
Initial zero setting range:	IZSR	[% of Max]	-10	/	10
Temperature range:	T_{min} / T_{max}	[°C]	-10	/	40
Test report (TR), Test Certificate (TC) or OIML Certificate of Conformity					
LOAD RECEPTOR (Module 2)	Type:				
Construction:		Platform			
Fraction of mpe:	p_2			0,5	
Number of load cells:	N			4	
Reduction ratio of the load transmitting device:	$R=F_M / F_L$			1	
Dead load of load receptor:	DL	[% of Max]		13	
Non uniform distribution of the load:	NUD	[% of Max]		20	
Correction factor:	$Q = 1 + (DL + T^+ + IZSR^+ + NUD) / 100$			1,43	
LOAD CELL ANALOG (Module 3)	Type:	1042			
Accuracy class according to OIML R60:	$Class_{LC}$	(A, B, C or D)		C	
Maximum number of load cell intervals:	n_{Lc}			6000	
Fraction of mpe:	p_3			0,7	
Rated output (sensitivity):	C	[mV / V]		2	
Input resistance of single load cell:	R_{LC}	[Ω]		415	
Minimum load cell verification interval: ($v_{min\%} = 100 / Y$)	$v_{min\%}$	[% of Emax]		0,00667	
Rated capacity:	E_{max}	[kg]		30	
Minimum dead load, relative:	$(E_{min} / E_{max}) * 100$	[%]		0	
Minimum dead load output return: ($DR_{\%} = 50 / Z$)	$DR_{\%}$	[% of Emax]		0,00833	
Temperature range:	T_{min} / T_{max}	[°C]	-10	/	40
Test report (TR) or Test Certificate (TC/OIML) as appropriate					
COMPLETE WEIGHING INSTRUMENT		Multi-range			
Manufacturer: S. C. FLINTAB S.R.L.	Type:	BX2 platform scale			
Accuracy class according to EN 45501 and OIML R76:	$Class_{WI}$	(I, II, III or IIII)		III	
Fractions: $p_i = p_1^2 + p_2^2 + p_3^2$:	p_i			1,0	
Maximum capacity:	Max	[kg]	>>>>>>>>>>>>>>>>>>		60
Maximum capacity for each partial weighing range:	Max_1 / Max_2	[kg]	30		60
Number of verification scale intervals for each weighing range	n_1 / n_2		6000		6000
Verification scale interval for each weighing range	e_1 / e_2	[kg]	0,005		0,01
Utilisation ratio of the load cell	$\alpha = (Max_i / E_{max}) * (R / N)$		0,25		0,50
Input voltage (from the load cels):	$\Delta_u = C * U_{exc} * \alpha * 1000 / n$	[µV / e]	0,42		0,83
Cross-section of each wire in the J-box cable:	A	[mm²]	>>>>>>>>>>>>>>>>>>		0,22
J-box cable-Length to the junction box for load cells	L	[m]	>>>>>>>>>>>>>>>>>>		5
Temperature range to be marked on the instrument	Not required T_{min} / T_{max}	[°C]			
Peripheral Equipment subject to legal control:					

Acceptance criteria for compatibility				Passed, provided no result below is < 0		
$Class_{WI}$	<=	$Class_{ind}$ & $Class_{LC}$	(WELMEC 2: 1)	$Class_{WI}$:	PASSED	
p_i	<=	1	(R76: 3.5.4.1)	$1 - p_i$ =	>>>>>>>>>>>>>>>>>>	0,0
n_i	<=	n_{max} for the class	(R76: 3.2)	n_{max}, for the class - n_i =	4000	4000
n_i	<=	n_{ind}	(WELMEC 2: 4)	$n_{ind} - n_i$ =	4000	4000
n_i	<=	n_{LC}	(R76: 4.12.2)	$n_{LC} - n_i$ =	0	0
E_{min}	<=	DL * R / N	(WELMEC 2: 6d)	(DL * R / N) - E_{min} =	1,95	<<<<<<<<<<<<<<<<<
$v_{min} * \sqrt{N} / R$	<=	e_i	(R76: 4.12.3)	$e_i - (v_{min} * \sqrt{N} / R)$ =	0,001	0,006
or (if v_{min} is not given)				Alternative solutions: ↑ ↓		
$(E_{max} / n_{LC}) * (\sqrt{N} / R)$	<=	e_i	(WELMEC 2: 7)	$e_i - ((E_{max} / n_{LC}) * (\sqrt{N} / R))$ =		
Δu_{min}	<=	Δu	(WELMEC 2: 8)	$\Delta u - \Delta u_{min}$ =	0,02	0,43
R_{Lmin}	<=	R_{LC} / N	(WELMEC 2: 9)	$(R_{LC} / N) - R_{Lmin}$ =	>>>>>>>>>>>>>>>>>>	46
L / A	<=	$(L / A)_{max}^{WI}$	(WELMEC 2: 10)	$(L / A)_{max}^{WI} - (L / A)$ =	>>>>>>>>	682
T_{range}	<=	$T_{max} - T_{min}$	(R76: 3.9.2.2)	$(T_{max} - T_{min}) - T_{range}$ =		20
Q * Max * R / N	<=	E_{max}	(R76: 4.12.1)	$E_{max} - (Q * Max * R / N)$ =	>>>>>>>>>>>>>>>>>>	8,6
$DR_{\%}$	<=	$125 * e_1$ / Max	(WELMEC 2: 6c)	$(125 * e_1 / Max) - DR_{\%}$ =	0,0021	<<<<<<<<<<<<<<<<<
or (if DR% is not given)				Alternative solutions: ↑ ↓		
$0.4 * Max / \epsilon_1$	<=	n_{Lc}	(WELMEC 2: 6c)	$n_{LC} - (0.4 * Max / e_1)$ =		

Signature and date:

Conclusion . . . . . ***PASSED***

This is an authentic document made from the program: "Compatibility of NAWI-modules version 3.2".